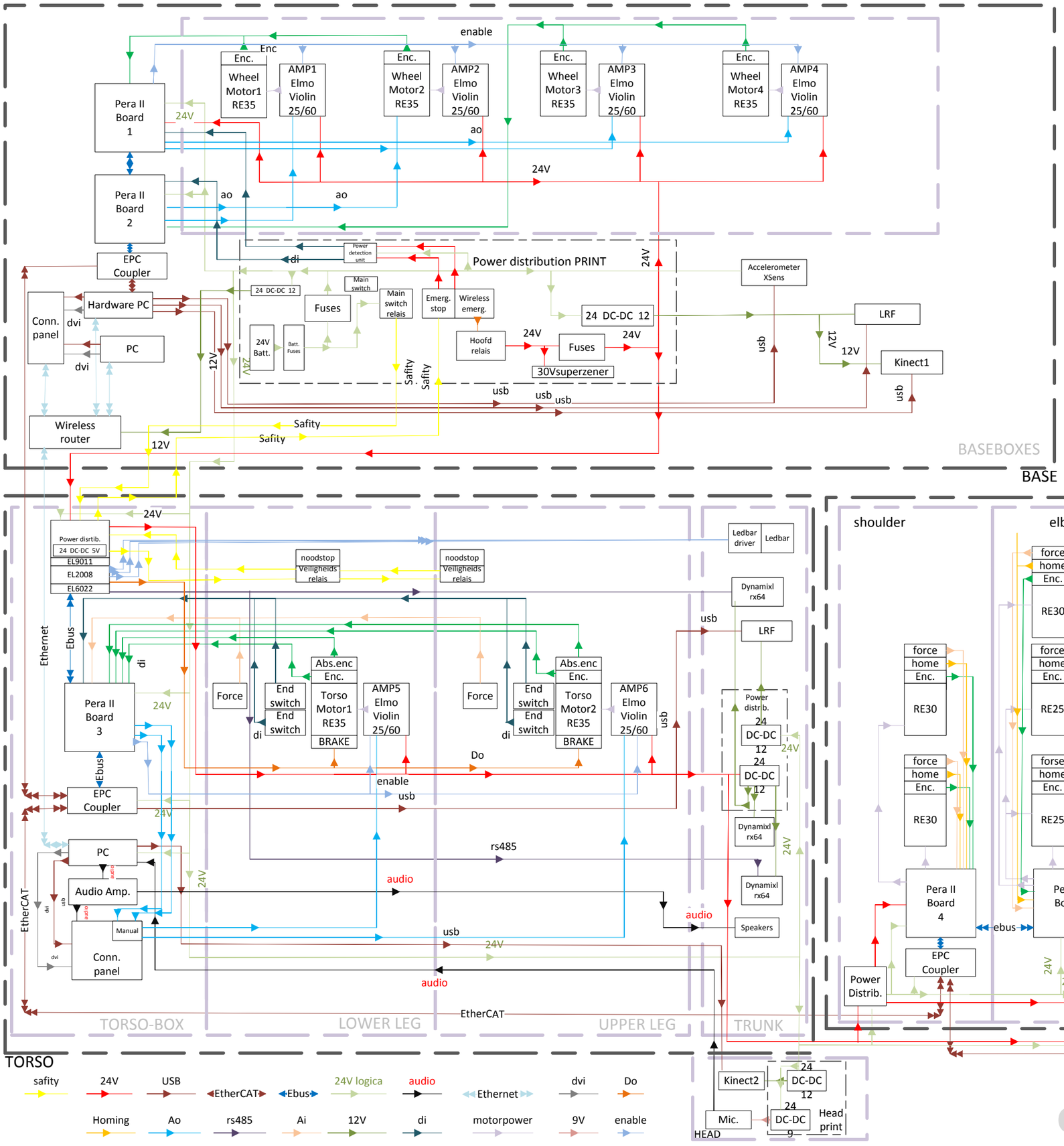

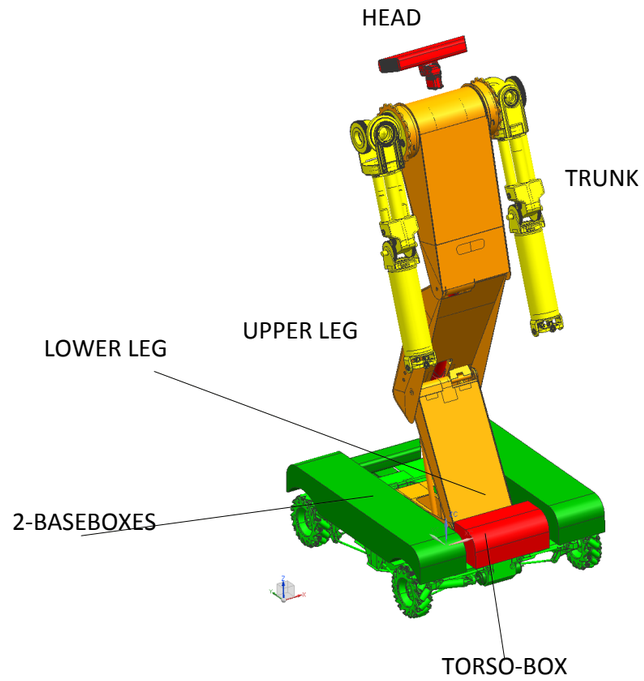

Confidential

AMIGO Concept System overview rev-22